DK20 SERIES

39-57 HP

COMPACT TRACTORS

KIOTI

Compact Power, Maximum Results

KUBOTA
KUBOTA
M-5091

DK20 / DK20SE SERIES
EXPERIENCE KIOTI'S MOST POWERFUL COMPACT TRACTOR

Designed for those who demand exceptional performance. DK Series tractors master the toughest terrain and tasks with ease, while remaining agile to navigate tight spaces. The SE models elevate your operating experience with enhanced comfort and convenience features.

- Manual or Hydrostatic Transmission
- High-Capacity Hydraulic Pump
- Rear Differential Lock
- Power and Tilt Steering
- Four-Wheel Drive
- 2,716 Pound 3-Point Hitch Capacity

DK20 / DK20 SE SERIES
MAXIMIZE YOUR PRODUCTIVITY WITH THE POWER TO TACKLE TOUGH TASKS

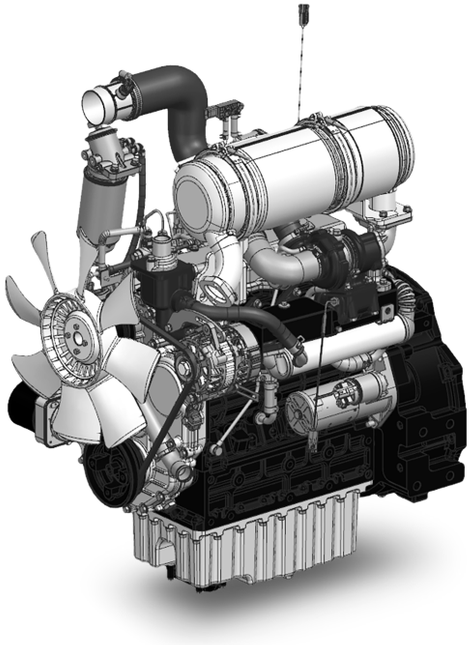

Fuel Efficient Diesel Engine
KIOTI's powerful Tier 4 diesel engine with ECO Technology delivers exceptional performance, improved fuel efficiency, and reduced noise levels.

Proven Quality and Performance
Rely on the proven capability of the KIOTI engine to deliver consistent power and dependability, ensuring that you can tackle tough jobs with confidence, knowing that your equipment will deliver optimal results.

High-Capacity Hydraulic Pump
A high-capacity, efficient tandem hydraulic pump provides smoother handling in heavy-duty working conditions. Provides smooth and consistent hydraulic flow to increase operator productivity.

Rear Differential Lock
The lever easily engages the differential, ensuring optimal traction in slippery conditions like uneven or muddy terrain.

Projection Lamp
The combined projection head and working lamp allow the operator to experience safer and easier operation after dark.

Deluxe Suspension Seat
Provides a comfortable ride for the operator, even on rough terrain.

Four-Wheel Drive
Four-wheel drive comes standard on all models and is engaged with a simple push-pull lever.

Power and Tilt Steering
Standard power steering reduces effort for tight, repetitive turns. The tilt steering wheel adjusts easily with a push of a lever to fit operator needs.

Hydrostatic Transmission (SE Models)

Powerful, reliable hydrostatic transmissions for efficiency and control. The easy-to-use twin-pedals and 3-range transmission make operation smooth and safe.

HST Pedals

Allows for seamless on-the-go direction changes, keeping you focused on the job.

3-Point Control Lever (SE Models)

Provides convenient raising and lowering of the lift arms, simplifying implement attachment.

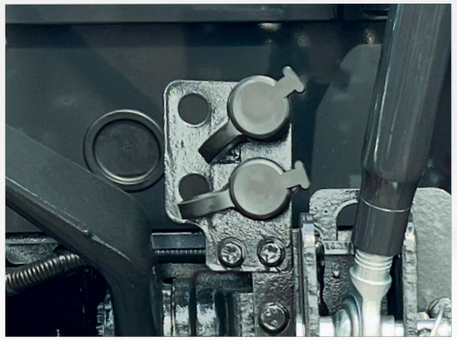

Rear Hydraulic Remotes (SE Models)

A standard single remote valve, with an optional second valve, accommodates a wide range of attachments and implements.

Single Lever Joystick (SE Models)

The lever returns to neutral when released. A float position enables the bucket to float freely over the ground surface.

Rubber Floor Mats (SE Models)

Protects the base from dents and scratches, making it easy to clean.

DK20 SERIES

COMPACT TRACTOR SPECIFICATIONS

MODEL		DK4520	DK5020	DK5520
ENGINE				
Engine Gross	HP (kW)	44.9 (33.5)	50.3 (37.5)	55.0 (41.0)
PTO	HP (kW)	38.9 (29.0)	41.5 (31.0)	46.4 (34.6)
Displacement	cu. in. (cc)	111.4 (1,825.5)		
Rated Revolution	rpm	2,600		
Fuel Tank Capacity	gal. (ℓ)	11.9 (45.0)		
DRIVE TRAIN				
Clutch		Dry Single Stage		
Transmission		Synchronized Shuttle		
Speeds		8F/8R		
Differential Lock		Rear Standard		
Brake		Wet Disc		
PTO		Independent		
Rear PTO (standard)		540		
4WD Type		Manual		
HYDRAULIC SYSTEM				
Pump		Gear		
Pump Capacity (Max. Flow Rate)	gpm (L/min)	14.6 (55.1)		
3-Point Hitch		Category I		Category II
Maximum Lifting Capacity*	lb. (kg)	2,716.0 (1,231.9)		
Hydraulic Lift Control System		Position		
No. of Standard Remote Valves		2 Optional		
Steering		Hydraulic Power Steering		
TIRE SIZE				
Front AG.		8-16 (29-12.5-15, 10-16.5)		
Rear AG.		13.6-24 (21.5L-16.1, 14.9-24)		
TRAVELING SPEEDS				
Forward	mph (km/h)	1.29~16.71 (2.08~26.9)		
Reverse	mph (km/h)	1.26~16.28 (2.03~26.2)		
DIMENSIONS				
Overall Length w/o Front Weight & w/ 3-pt Hitch	in. (mm)	124.3 (3,157.0)		
Overal Width (Min. Tread)	in. (mm)	62.8 (1,596.0)		
Overall Height	in. (mm)	96.8 (2,458.0)		
Wheelbase	in. (mm)	71.3 (1,810.0)		

* @ 24 aft. of hitch

NOTE: specifications and design are subject to change without notice.

DK20SE SERIES

COMPACT TRACTOR SPECIFICATIONS

MODEL		DK4220SEH	DK4220SEH CAB	DK4720SEH	DK4720SEH CAB	DK5320SEH	DK5320SEH CAB	DK6020SEH	DK6020SEH CAB
ENGINE									
Engine Gross	HP (kW)	39.6 (29.5)		44.9 (33.5)		50.3 (37.5)		57.7 (43.0)	
PTO	HP (kW)	29.1 (21.7)		33.4 (24.9)		39.3 (29.3)		44.9 (33.5)	
Displacement	cu. in. (cc)	111.4 (1,826.0)							
Rated Revolution	rpm	2,600							
Fuel Tank Capacity	gal. (ℓ)	12.7 (39.6)							
DRIVE TRAIN									
Clutch		N/A							
Transmission		Hydrostatic							
Speeds		3 Range							
Differential Lock		Rear Standard							
Brake		Wet Disc							
PTO		Independent							
Rear PTO (standard)		540							
4WD Type		Manual							
HYDRAULIC SYSTEM									
Pump		Gear							
Pump Capacity (Max. Flow Rate)	gpm (L/min)	16.5 (62.4)							
3-Point Hitch		Category I						Category II	
Maximum Lifting Capacity*	lb. (kg)	2,716.0 (1,231.9)							
Hydraulic Lift Control System		Position							
No. of Standard Remote Valves		2							
Steering		Hydraulic Power Steering							
TIRE SIZE									
Front AG.		8-16 (29-12.5-15, 10-16.5)							
Rear AG.		13.6-24 (21.5L-16.1, 14.9-24)							
TRAVELING SPEEDS									
Forward	mph (km/h)	0~18.45 (0~29.7)							
Reverse	mph (km/h)	0~12.92 (0~20.8)							
DIMENSIONS									
Overall Length w/o Front Weight & w/ 3-pt Hitch	in. (mm)	125.5 (3,189.0)							
Overal Width (Min. Tread)	in. (mm)	62.8 (1,596.0)							
Overall Height	in. (mm)	96.8 (2,458.0)	93.0 (2,363.0)	96.8 (2,458.0)	93.0 (2,363.0)	96.8 (2,458.0)	93.0 (2,363.0)	96.8 (2,458.0)	93.0 (2,363.0)
Wheelbase	in. (mm)	71.3 (1,810.0)							

* @ 24 aft. of hitch

NOTE: specifications and design are subject to change without notice.

FRONT END LOADER SPECIFICATIONS

MODEL		KL5520 / KL5521
Maximum Lift Height (to Pivot Point)	in. (mm)	107.7 (2,375.0)
Clearance w/Bucket Level	in. (mm)	96.3 (2,446.0)
Clearance w/Bucket Dumped	in. (mm)	78.8 (2,001.0)
Reach at Maximum Height	in. (mm)	22.7 (576.0)
Reach w/Bucket on Ground	in. (mm)	71.1 (1,806.0)
Maximum Rollback Angle	deg.	41
Diggiging Depth Below Grade	in. (mm)	8.6 (218.0)
Overal Height (in Carry Position)	in. (mm)	54.0 (1,371.0)
Depth of Bucket (to Back of Inner Shell)	in. (mm)	18.5 (470.0)
Height of Bucket	in. (mm)	22.0 (560.0)
Length of Bucket (to Pivot Pin)	in. (mm)	26.0 (660.0)
Lift Capacity to Full Height (at Pivot Pins)	lb. (kg)	2,474.0 (1,122.2)
Breakout Force (at Pivot Pins)	lb. (kg)	3,895.0 (1,766.7)
Relief Valve Setting (Loader Control Valve)	psi (kg/cm^2)	2,273.0 (159.8)
Bucket Size (QA)	in. (mm)	66.0 / 72.0 (29.9 / 32.7)
Bucket Capacity (Heaped)	in.^{3} (m^3)	66.0 (13.4) / 72.0 (15.5)

NOTE: specifications and design are subject to change without notice.

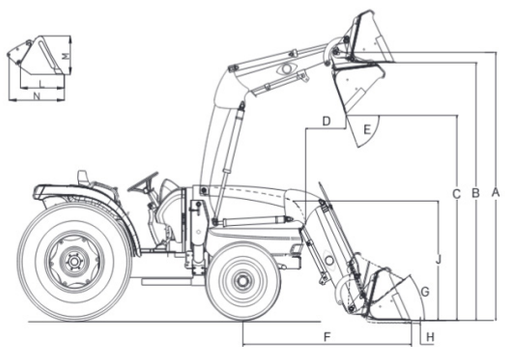

BACKHOE SPECIFICATIONS

MODEL		KB2485
Digging Depth (Two Foot Flat Bottom)	in. (mm)	94.4 (2,400.0)
Reach from Center Line of Swing Pivot	in. (mm)	136.2 (3,460.0)
Loading Height (Bucket at 60°)	in. (mm)	80.3 (2,040.0)
Maximum Leveling Angle	deg.	10
Swing Arc	deg.	180
Transport Height (Maximum)	in. (mm)	92.9 (2,360.0)
Transport Overhang	in. (mm)	50.4 (1,280.0)
Bucket Rotation	deg.	180
Stabilizer Spread (Down Position)	in. (mm)	68.7 (1,745.0)
Stabilizer Spread (Up Position)	in. (mm)	46.4 (1,180.0)
Angle of Departure	deg.	21
Shipping Weight (Without Bucket)	lb. (Kgf)	1,102.0 (499.9)
Bucket Digging Force	lb. (Kgf)	3,748.0 (1,700.1)
Dipperstick Digging Force	lb. (Kgf)	2,205.0 (1,000.2)
Operating Pressure	psi (bar)	2,466.0 (170.0)

NOTE: specifications and design are subject to change without notice.

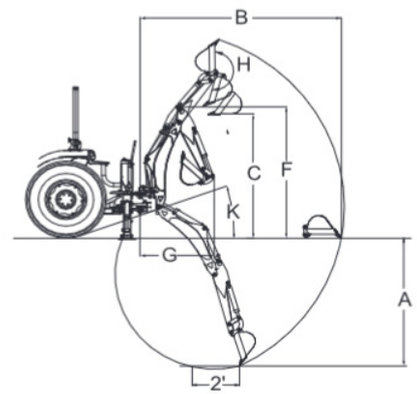

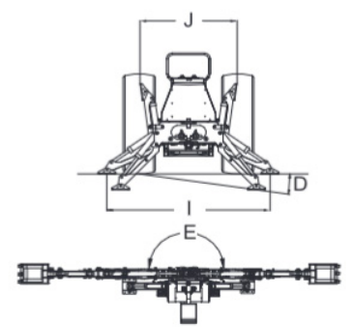

STANDARD EQUIPMENT

- Power Steering
- Rear PTO
- Wet Multi Disc Brakes
- Drawbar
- Parking Brake
- Front Working Lights (Cab)
- Rear Working Lights (Cab)
- Deck Mat (SE models only)
- Joystick Valve (SE models only)
- Side View Mirror (SE models 2 ea)
- Telescopic Lower Links (SE models only)
- HST Linked Pedal (SE models only)
- Dual Remote Hydraulic Valve (Spring/Detent) SE models only

OPTIONAL EQUIPMENT

- Front Weights
- Deck Mat
- Mid PTO
- Clevis Type Drawbar
- Side View Mirror (1 ea)
- Fuel Heater Kit
- Rear Wheel Weight (Ag Tire Only)
- 3rd Function Kit for Front End Loader
- Beacon Light (SE Cab Models Only)
- RPM Increase Kit for Loader
- Bluetooth Speaker Kit (SE ROPS Only)
- Dual remote Hydraulic Valve (spring/spring & detent/dual detent)

ATTACHMENTS

- Front End Loader
- Backhoe
- Snowblower
- Contact your local KIOTI dealer for available implements and attachments.

Dealer Imprint Area

Daedong - USA, Inc.
KIOTI Tractor Division
6300 KIOTI Drive, Wendell, NC 27591 USA
Toll free 877-GO-KIOTI **Fax** 919-374-5001
Web www.KIOTI.com

KIOTI Tractor / Daedong Ind. Co., Ltd. / 09.25

LIT-DK20/DK20SE-01